Wheatstone

GJ Series

Explosion-proof Joint Actuator Module

MODULAR DESIGN

- Rigorous Ex & protection certifications
- High-torque, high-rigidity output
- High-precision control and high integration
- Enhanced environmental adaptabilitY

Rated Voltage	DC24~48V	Protocol	CAN FD 、ETHERCAT、RS485
Reducer Type	Planetary / Harmonic	Ex Marking	Ex db IIC T6 Gb
Rated Torque	Customized as required	IP Rating	IP65
Rated Power	Customized as required	Tamb	-20~40℃

Motors can be customized to meet customer requirements

HST-J100-EX-GJ



Jiangsu Wheatstone Electromechanical Technology Co., LTD
Tel: +86 519-86163211
Web: www.wheatstonemotor.com
Wuxi Factory: 7/F, B5, Taihu Zhigu Sci-Tech Park, No.8 Dicui Rd, Binhu Dist, Wuxi, Jiangsu, China
Changzhou Factory: No.103 Xizhao Lane, Xuedong Industrial Park, Xueyan Town, Wujin Dist, Changzhou, Jiangsu, China

Wheatstone

GJ Series

Explosion-proof Joint Actuator Module

MODULAR DESIGN

- Rigorous Ex & protection certifications
- High-torque, high-rigidity output
- High-precision control and high integration
- Enhanced environmental adaptabilitY

Rated Voltage	24V	Protocol	CAN FD 、ETHERCAT、RS485
Reduction Ratio	6.33	Ex Marking	Ex db IIC T6 Gb
Rated Torque	18.8 N.m	IP Rating	IP66
Rated Power	157 W	Rated Speed	80 RPM

Motors can be customized to meet customer requirements

HST-J96-EX-GJ-04

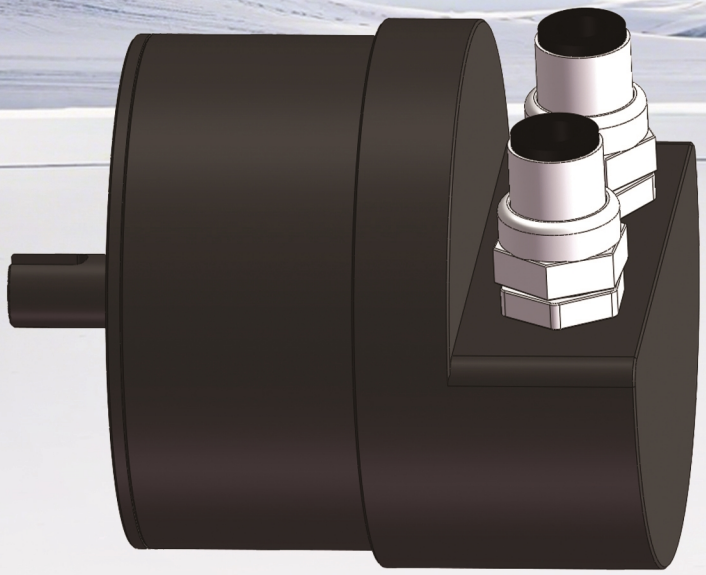

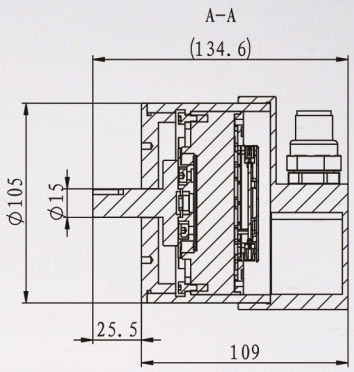

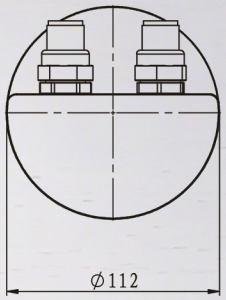

Jiangsu Wheatstone Electromechanical Technology Co., LTD
Tel: +86 519-86163211
Web: www.wheatstonemotor.com
Wuxi Factory: 7/F, B5, Taihu Zhigu Sci-Tech Park, No.8 Dicui Rd, Binhu Dist, Wuxi, Jiangsu, China
Changzhou Factory: No.103 Xizhao Lane, Xuedong Industrial Park, Xueyan Town, Wujin Dist, Changzhou, Jiangsu, China

Wheatstone

GJ Series

Explosion-proof Joint Actuator Module

MODULAR DESIGN

- Rigorous Ex & protection certifications
- High-torque, high-rigidity output
- High-precision control and high integration
- Enhanced environmental adaptabilitY

Rated Voltage	48V	Protocol	CAN FD 、ETHERCAT、RS485
Peak Torque	497 N.m	Ex Marking	Ex db IIC T6 Gb
Rated Torque	140 N.m	IP Rating	IP66
Rated Power	0.55 KW	Rated Speed	39.2 RPM

Motors can be customized to meet customer requirements

HST-J142-EX-GJ-08

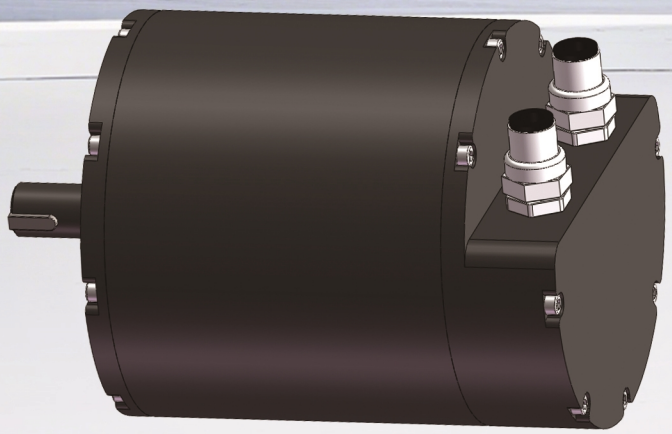

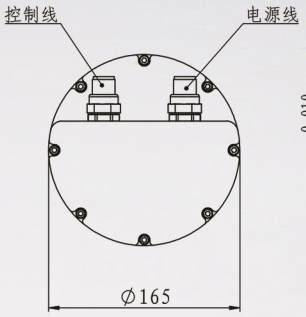

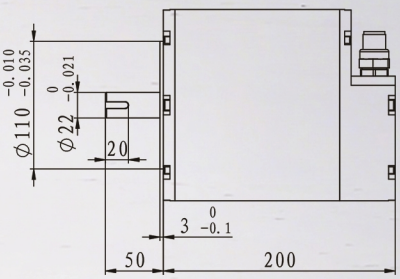

Jiangsu Wheatstone Electromechanical Technology Co., LTD
Tel: +86 519-86163211
Web: www.wheatstonemotor.com
Wuxi Factory: 7/F, B5, Taihu Zhigu Sci-Tech Park, No.8 Dicui Rd, Binhu Dist, Wuxi, Jiangsu, China
Changzhou Factory: No.103 Xizhao Lane, Xuedong Industrial Park, Xueyan Town, Wujin Dist, Changzhou, Jiangsu, China

Wheatstone

GJ Series

Explosion-proof Joint Actuator Module

MODULAR DESIGN

- Rigorous Ex & protection certifications
- High-torque, high-rigidity output
- High-precision control and high integration
- Enhanced environmental adaptabilitY

Rated Voltage	48V	Protocol	CAN FD 、ETHERCAT、RS485
Gear Ratio	22	Ex Marking	Ex db IIC T6 Gb
Rated Torque	100 N.m	IP Rating	IP66
Rated Power	1 KW	Rated Speed	100 RPM

Motors can be customized to meet customer requirements

HST-J160-EX-GJ-09

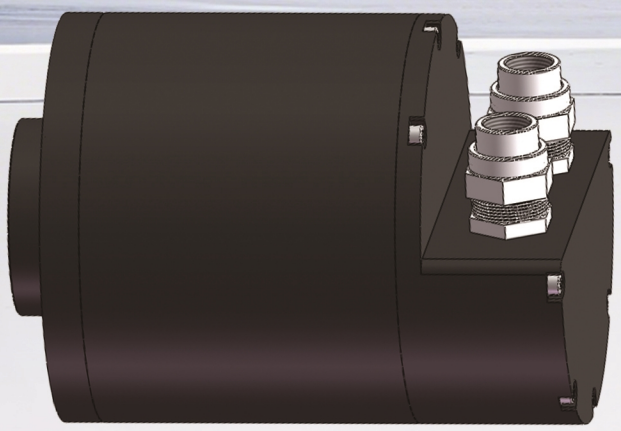

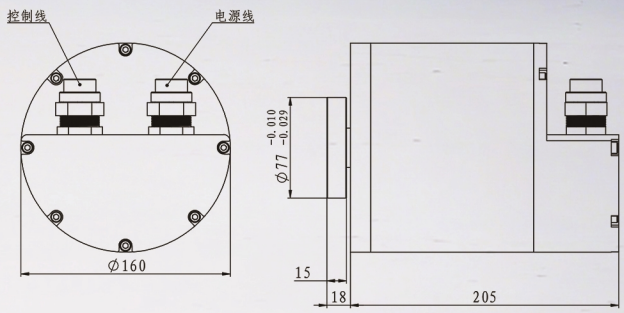

Jiangsu Wheatstone Electromechanical Technology Co., LTD
Tel: +86 519-86163211
Web: www.wheatstonemotor.com
Wuxi Factory: 7/F, B5, Taihu Zhigu Sci-Tech Park, No.8 Dicui Rd, Binhu Dist, Wuxi, Jiangsu, China
Changzhou Factory: No.103 Xizhao Lane, Xuedong Industrial Park, Xueyan Town, Wujin Dist, Changzhou, Jiangsu, China

Wheatstone

GJ Series

Explosion-proof Joint Actuator Module

MODULAR DESIGN

- Rigorous Ex & protection certifications
- High-torque, high-rigidity output
- High-precision control and high integration
- Enhanced environmental adaptabilitY

Rated Voltage	48V	Protocol	CAN FD 、ETHERCAT、RS485
Reduction Ratio	51	Ex Marking	Ex db IIC T6 Gb
Rated Torque	255 N.m	IP Rating	IP54
Rated Power	1 KW	Rated Speed	39.2 RPM

Motors can be customized to meet customer requirements

HST-J170-EX-GJ-05

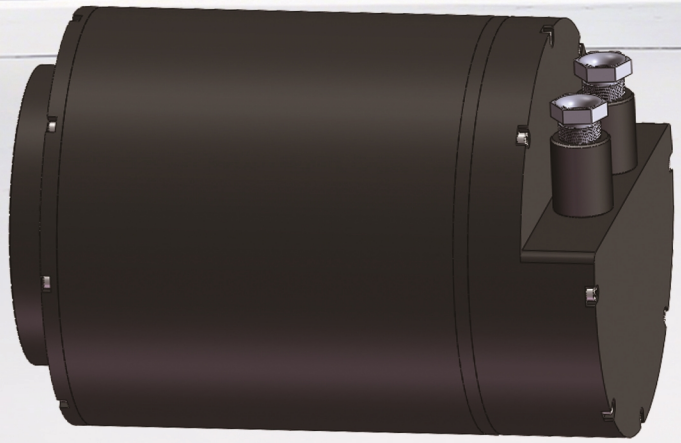

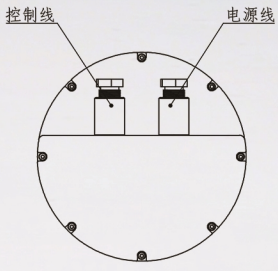

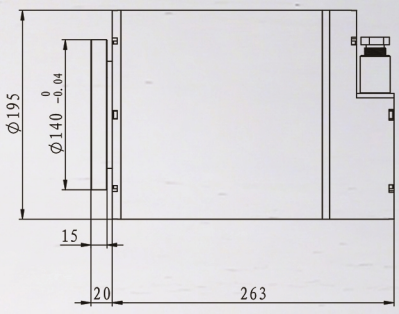

Jiangsu Wheatstone Electromechanical Technology Co., LTD
Tel: +86 519-86163211
Web: www.wheatstonemotor.com
Wuxi Factory: 7/F, B5, Taihu Zhigu Sci-Tech Park, No.8 Dicui Rd, Binhu Dist, Wuxi, Jiangsu, China
Changzhou Factory: No.103 Xizhao Lane, Xuedong Industrial Park, Xueyan Town, Wujin Dist, Changzhou, Jiangsu, China

Wheatstone

GJ Series

Explosion-proof Joint Actuator Module

MODULAR DESIGN

- Rigorous Ex & protection certifications
- High-torque, high-rigidity output
- High-precision control and high integration
- Enhanced environmental adaptabilitY

Rated Voltage	48V	Protocol	CAN FD 、ETHERCAT、RS485
Reduction Ratio	28	Ex Marking	Ex db IIC T6 Gb
Rated Torque	120 N.m	IP Rating	IP54
Rated Power	1 KW	Rated Speed	80 RPM

Motors can be customized to meet customer requirements

HTS-J120-EX-GJ-02

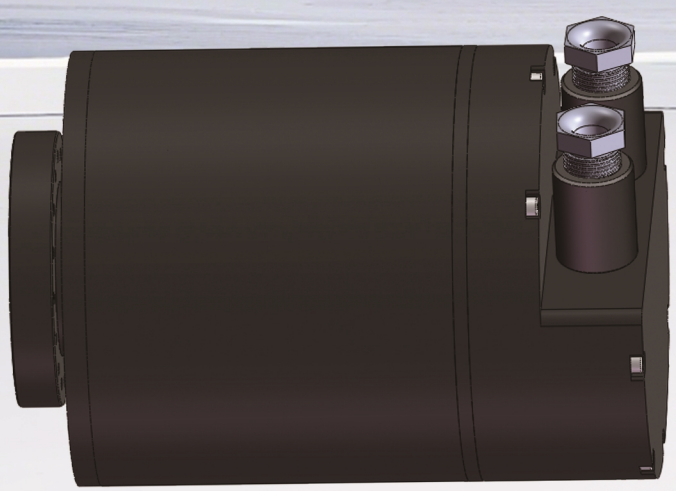

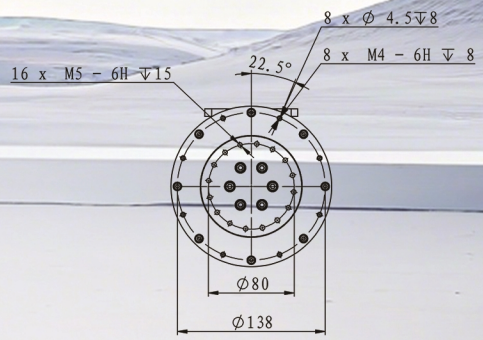

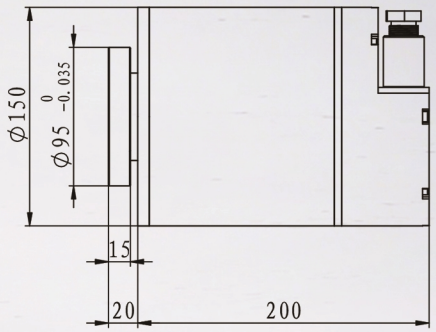

Jiangsu Wheatstone Electromechanical Technology Co., LTD

Tel: +86 519-86163211

Web: www.wheatstonemotor.com

Wuxi Factory: 7/F, B5, Taihu Zhigu Sci-Tech Park, No.8 Dicui Rd, Binhu Dist, Wuxi, Jiangsu, China

Changzhou Factory: No.103 Xizhao Lane, Xuedong Industrial Park, Xueyan Town, Wujin Dist, Changzhou, Jiangsu, China